Characterization of heterogeneous hydraulic conductivity field via Karhunen-Loève expansions and a measure-theoretic computational method

Jiachuan He

University of Texas at Austin

April 15, 2016

Problem

Specification of a variety of parameters, such as hydraulic conductivity, is required in models that have been widely used to analyze groundwater systems and contaminant transport. However, it is practically impossible to characterize the model parameters exhaustively due to the complex hydrogeological environment. For this reason, inverse modeling is needed to identify input parameters by incorporating observed model responses, e.g., hydraulic conductivities are derived based on observed hydraulic head.

Given uncertain hydraulic head data from observation wells, the stochastic inverse problem is solved numerically to obtain a probability measure on the space of unknown parameters characterizing the heterogeneity of the hydraulic conductivity field.

Overview

Groundwater flow equation

$$S\frac{\partial h(\mathbf{x},t)}{\partial t} + \nabla \cdot \mathbf{q}(\mathbf{x},t) = g(\mathbf{x},t) \tag{1}$$

$$\mathbf{q}(\mathbf{x},t) = -K(\mathbf{x})\nabla h(\mathbf{x},t) \tag{2}$$

subject to initial and boundary conditions

$$h(\mathbf{x},0) = H_0(\mathbf{x}), \quad \mathbf{x} \in D \tag{3}$$

$$h(\mathbf{x},t) = H(\mathbf{x},t), \quad \mathbf{x} \in \Gamma_D \tag{4}$$

$$\mathbf{q}(\mathbf{x},t) \cdot \mathbf{n}(\mathbf{x}) = Q(\mathbf{x},t), \quad \mathbf{x} \in \Gamma_N \tag{5}$$

where S is specific storage (LT^{-1}), h is hydraulic head (L), and g is source or sink (T^{-1}).

Karhunen-Loève expansions

Inverse problems are often ill-posed. Inverse estimation of permeability fields is commonly performed by reducing the number of original unknowns of a heterogeneous hydraulic conductivity field to a smaller group of unknowns. This makes the inverse problem better posed by reducing redundancy while capturing the most important features of the field. The Karhunen-Loeve Expansion (KLE) is a classical option for deriving low-dimensional parameterizations for inverse estimation applications [1]. With the knowledge of the property covariance function, the KLE can provide an accurate characterization of a complex field.

"In the theory of stochastic processes, the Karhunen-Loève theorem (named after Kari Karhunen and Michel Loève), also known as the KosambiKarhunenLove theorem is a representation of a stochastic process as an infinite linear combination of orthogonal functions..." (wikipedia)

Let $Y(\mathbf{x},\omega) = \ln[K(\mathbf{x},\omega)]$ be a random process, where K is the hydraulic conductivity, $\mathbf{x}$ is the position vector defined over the domain $\mathbf{D}$, and ω belongs to the space of random events $\mathbf{\Omega}$. Let $\bar{Y}(\mathbf{x})$ denote the expected value of $Y(\mathbf{x},\omega)$ over all possible realizations of the process, and $C(\mathbf{x_1},\mathbf{x_2})$ denote its covariance function. Being an autocovariance function, $C(\mathbf{x_1},\mathbf{x_2})$ is bounded, symmetric, and positive definite. Thus, it has the spectral decomposition

$$C(\mathbf{x_1},\mathbf{x_2}) = \sum_{n=1}^{\infty} \lambda_n f_n(\mathbf{x_1}) f_n(\mathbf{x_2}) \qquad (Mercer's Thm) \tag{6}$$

where λ_n and $f_n(\mathbf{x})$ are the solutions to the homogeneous Fredholm integral equation of the second kind:

$$\int_{\mathbf{D}} C(\mathbf{x_1},\mathbf{x_2}) f_n(\mathbf{x_1}) d\mathbf{x_1} = \lambda_n f_n(\mathbf{x_2}). \tag{7}$$

The eigenfunctions are orthogonal and form a complete set. They can be normalized according to the following criterion

$$\int_{\mathbf{D}} f_n(\mathbf{x}) f_m(\mathbf{x}) = \delta_{nm}. \tag{8}$$

Hence, $Y(\mathbf{x}, \omega)$ can be written as

$$Y(\mathbf{x}, \omega) = \bar{Y}(\mathbf{x}) + \sum_{n=1}^{\infty} \xi_n(\omega) \sqrt{\lambda_n} f_n(\mathbf{x}), \qquad (Karhunen - LoeveThm) \tag{9}$$

where $\{\xi_n(\omega)\}$ is a set of random variables to be determined. The KLE of a Gaussian field has the further property that $\xi_n(\omega)$ are independent standard normal random variables (Itô-Nisio Theorem). Truncating the series in Eq (9) at the Nth term, gives

$$Y(\mathbf{x}, \omega) = \bar{Y}(\mathbf{x}) + \sum_{n=1}^{N} \xi_n(\omega) \sqrt{\lambda_n} f_n(\mathbf{x}). \tag{10}$$

Inverse estimation

$$Y(\mathbf{x},\omega) = \bar{Y}(\mathbf{x}) + \sum_{n=1}^{N} \xi_n(\omega)\sqrt{\lambda_n} f_n(\mathbf{x}). \tag{11}$$

The KLE provides a flexible and effective method for describing a spatially distributed hydraulic conductivity field. It represents the uncertain hydraulic conductivity field as weighted sums of predefined spatially variable basis functions. The random variables ξ_n in basis function weights will be quantified with a recently developed measure-theoretic framework.

The stochastic inverse estimation in this characterization of a heterogeneous hydraulic conductivity field problem is to determine a probability measure on ξ_n (input parameters) such that mapping this probability measure through the model produces the same probability measure as the one defined on the observable hydraulic head.

Inverse problem

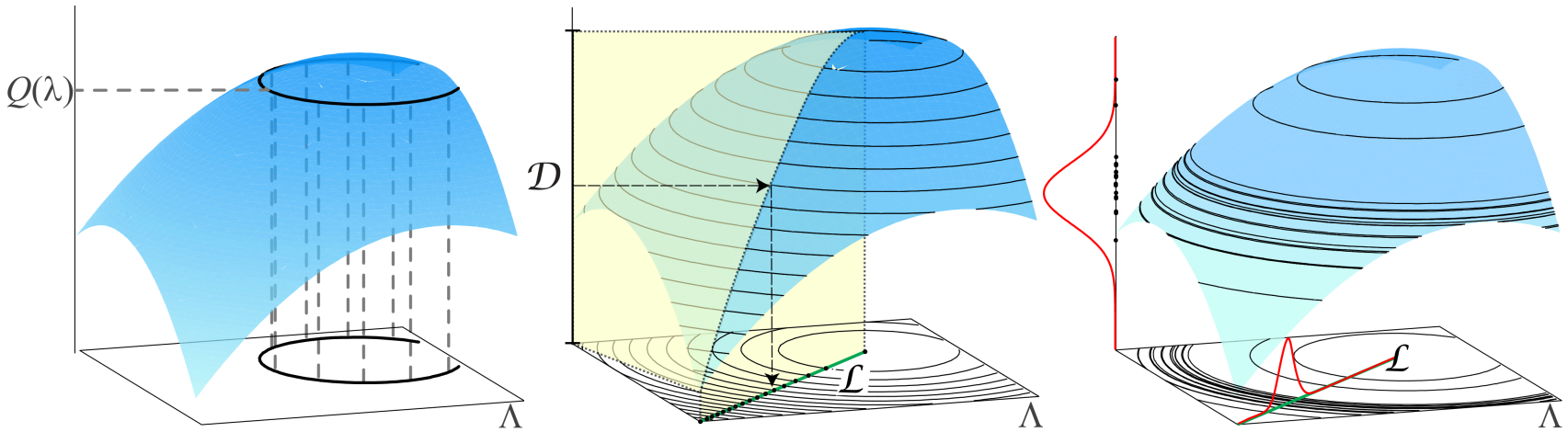

Figure : Illustrations of the inverse problem for a general two-to-one map Left: The set-valued inverse of a single output value. Middle: The representation of $\mathcal{L}$ as a transverse parameterization. Right: A probability measure described as a density on $\mathcal{D}$ maps uniquely to a probability density on $\mathcal{L}$. Figures adopted from [2]

$$P_{\mathcal{L}}(A) = \int_A \rho_{\mathcal{L}} d\mu_{\mathcal{L}} = \int_{Q_{\mathcal{L}}(A)} \rho_{\mathcal{D}} d\mu_{\mathcal{D}} = P_{\mathcal{D}}(Q_{\mathcal{L}}(A)) \tag{12}$$

Inverse problem

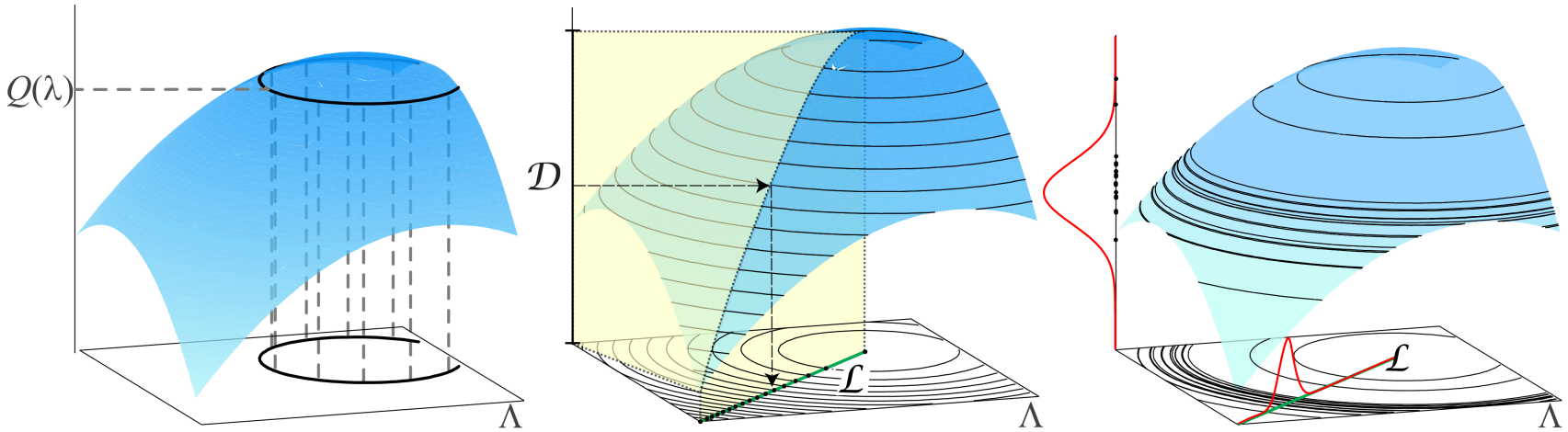

To calculate the probability of more arbitrary events in Λ, we make use of the Disintegration Theorem and a standard ansatz to compute a probability measure P_Λ in terms of an approximate density ρ_Λ that is consistent with $P_\mathcal{D}$. By saying P_Λ is consistent with $P_\mathcal{D}$, we mean that if B is any event in $\mathcal{D}$ (so $Q^{-1}(B)$ is a generalized contour event in Λ), then

$$\int_{Q^{-1}(B)} \rho_\Lambda(\lambda) d\mu_\Lambda = P_\Lambda(Q^{-1}(B)) = P_\mathcal{D}(B) = \int_B \rho_\mathcal{D} d\mu_\mathcal{D}. \tag{13}$$

Numerical Approximation of Inverse Probability

Suppose the probability density function $\rho_{\mathcal{D}}$ associated with $P_{\mathcal{D}}$ is known. Let $\{D_k\}_{k=1}^{M}$ be a partition of $\mathcal{D}$, and let p_k be the probability of D_k. Let A be an event in Λ. We thus have the approximation

$$\int_{Q(A)} \rho_{\mathcal{D}} d\mu_{\mathcal{D}} \approx \sum_{D_k \subset Q(A)} p_k. \tag{14}$$

Let $\{\lambda^{(j)}\}_{j=1}^{N}$ be a collection of N points in Λ, which implicitly defines an n-dimensional Voronoi tessellation $\{\mathcal{V}_j\}_{j=1}^{N}$ associated with the points. For example, given $\lambda \in \Lambda$, $\lambda \in \mathcal{V}_k$ if $\lambda^{(k)}$ is the closest $\lambda^{(j)}$ to λ. Using the implicitly defined Voronoi tessellation and the partitioning of $\mathcal{D}$, we can calculate the probability $p_{\Lambda,j}$ associated with the implicitly defined Voronoi cell $\mathcal{V}_j$. Then we can approximate the probability of any event $A \subset \Lambda$ using a counting measure

$$P_{\Lambda}(A) \approx P_{\Lambda,N}(A) = \sum_{\lambda^{(j)} \in A} p_{\Lambda,j}. \tag{15}$$

Numerical Approximation of Inverse Probability

Algorithm:

- Choose points $\{\lambda^{(j)}\}_{j=1}^{N} \in \Lambda$.
- Denote the associated Voronoi tessellation $\{\mathcal{V}_j\}_{j=1}^{N} \subset \Lambda$.
- Evaluate $Q_j = Q(\lambda^{(j)})$ for all $\lambda^{(j)}$, $j = 1, .., N$.
- Choose a partitioning of $\mathcal{D}$, $\{D_k\}_{k=1}^{M} \subset \mathcal{D}$.
- Compute $p_k \approx \int_{D_k} \rho_{\mathcal{D}} d\mu_{\mathcal{D}}$, for $k = 1, ..., M$.
- Let $\mathcal{C}_k = \{j | Q_j \in D_k\}$ for $k = 1, ..., M$.
- Let $\mathcal{O}_j = \{k | Q_j \in D_k\}$, for $j = 1, .., N$.
- Let V_j be the approximate measure of $\mathcal{V}_j$, i.e. $V_j \approx \int_{\mathcal{V}_j} d\mu(\mathcal{V}_j)$ for $j = 1, .., N$.
- Set $p_{\Lambda,j} = (V_j / \sum_{i \in \mathcal{C}_{\mathcal{O}_j}} V_i) p_{\mathcal{D},\mathcal{O}_j}$, $j = 1, .., N$.

Illustrative example

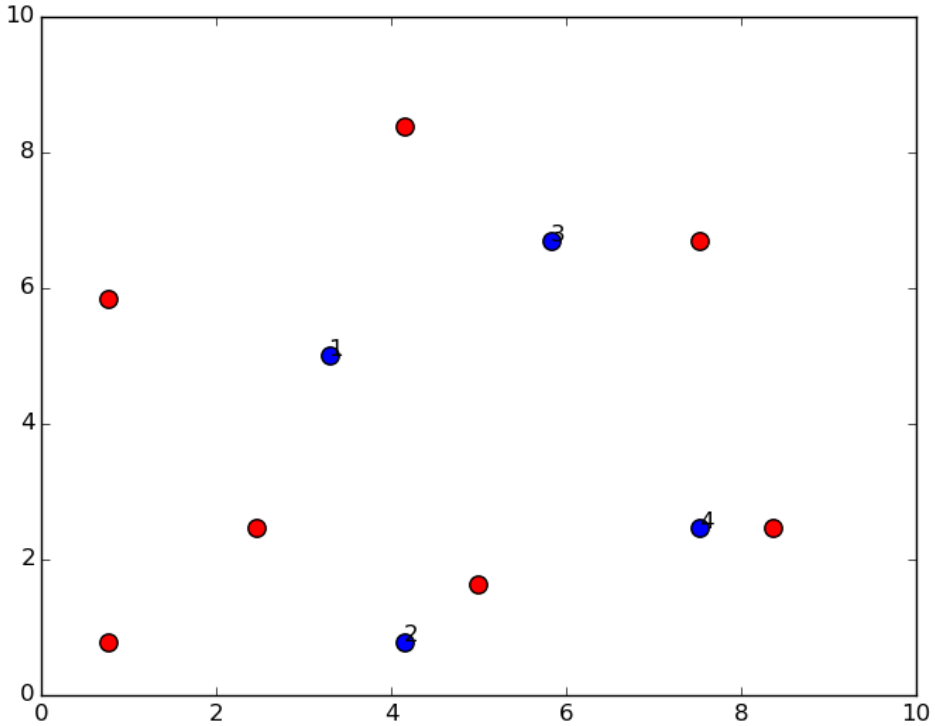

Figure : The domain with observation wells shown as red dots

Forward model

$$\nabla \cdot \mathbf{q}(\mathbf{x}) = 0 \tag{16}$$

$$\mathbf{q}(\mathbf{x}) = -K(\mathbf{x})\nabla h(\mathbf{x}) \tag{17}$$

subject to boundary conditions

$$h(\mathbf{x}) = H(\mathbf{x}), \quad \mathbf{x} \in \Gamma_D \tag{18}$$

$$\mathbf{q}(\mathbf{x}) \cdot \mathbf{n}(\mathbf{x}) = Q(\mathbf{x}), \quad \mathbf{x} \in \Gamma_N \tag{19}$$

Special types of covariance functions

$C(x_1, y_1) = \sigma^2 exp(-\frac{|x_1 - y_1|}{\eta_1})$
Eigenvalues and eigenfunctions of a covariance function can be solved from the following Fredholm equation:

$$\int_{\mathbf{D}} C(\mathbf{x_1}, \mathbf{x_2}) f_n(\mathbf{x_1}) d\mathbf{x_1} = \lambda_n f_n(\mathbf{x_2}) \tag{20}$$

λ_n and $f_n(\mathbf{x})$ can be found analytically:

$$\lambda_n = \frac{2\eta\sigma^2}{\eta^2 w_n^2 + 1} \tag{21}$$

$$f_n(x) = \frac{1}{\sqrt{(\eta^2 w_n^2 + 1)L/2 + \eta}} [\eta w_n cos(w_n x) + sin(w_n x)] \tag{22}$$

where w_n are positive roots of the characteristic equation $(\eta^2 w^2 - 1) sin(wL) = 2\eta w cos(wL)$.

Separable covariance function

For problems in multidimension, if the covariance function is separable, for example, $C(\mathbf{x},\mathbf{y}) = C(x_1, x_2; y_1, y_2) = \sigma^2 exp\left[-\frac{|x_1-y_1|}{\eta_1} - \frac{|x_2-y_2|}{\eta_2}\right]$ (Gaussian random field with the exponential covariance function) for a rectangular domain $D = \{(x_1, x_2) : 0 \leqslant x_1 \leqslant L_1, 0 \leqslant x_2 \leqslant L_2\}$
Eq.(20) can be solved independently for x_1 and x_2 directions to obtain eigenvalues $\lambda_n^{(1)}$ and $\lambda_n^{(2)}$, and eigenfunctions $f_n^{(1)}(x_1)$ and $f_n^{(2)}(x_2)$.

$$\lambda_n = \lambda_n^{(1)}\lambda_n^{(2)} \tag{23}$$

$$f_n(\mathbf{x}) = f_n(x_1, x_2) = f_n^{(1)}(x_1)f_n^{(2)}(x_2) \tag{24}$$

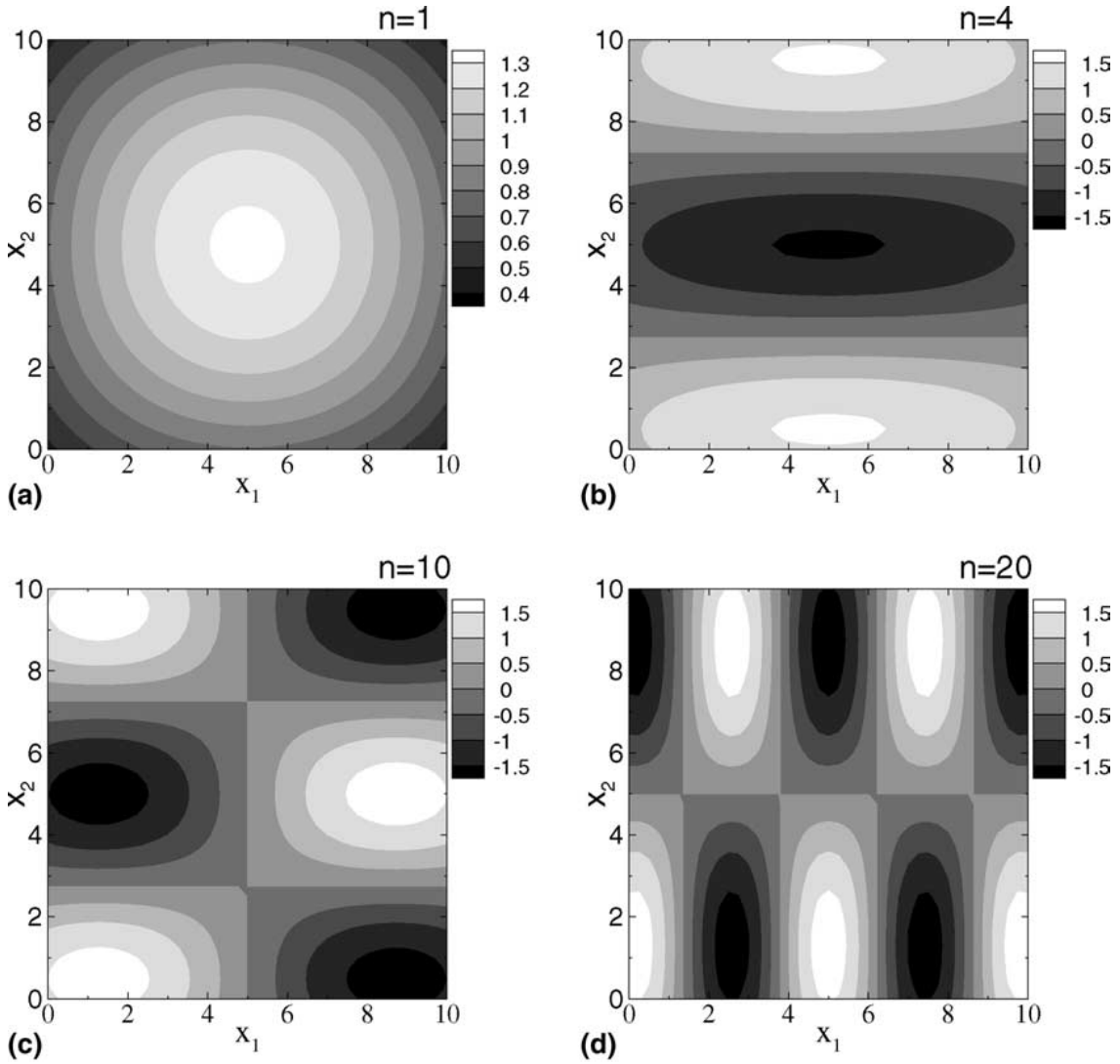

Figure : Examples of eigenfunctions f_n. Figures adopted from [6]

$$Y(\mathbf{x},\omega) = \bar{Y}(\mathbf{x}) + \sum_{n=1}^{7} \xi_n(\omega)\sqrt{\lambda_n} f_n(\mathbf{x}). \tag{25}$$

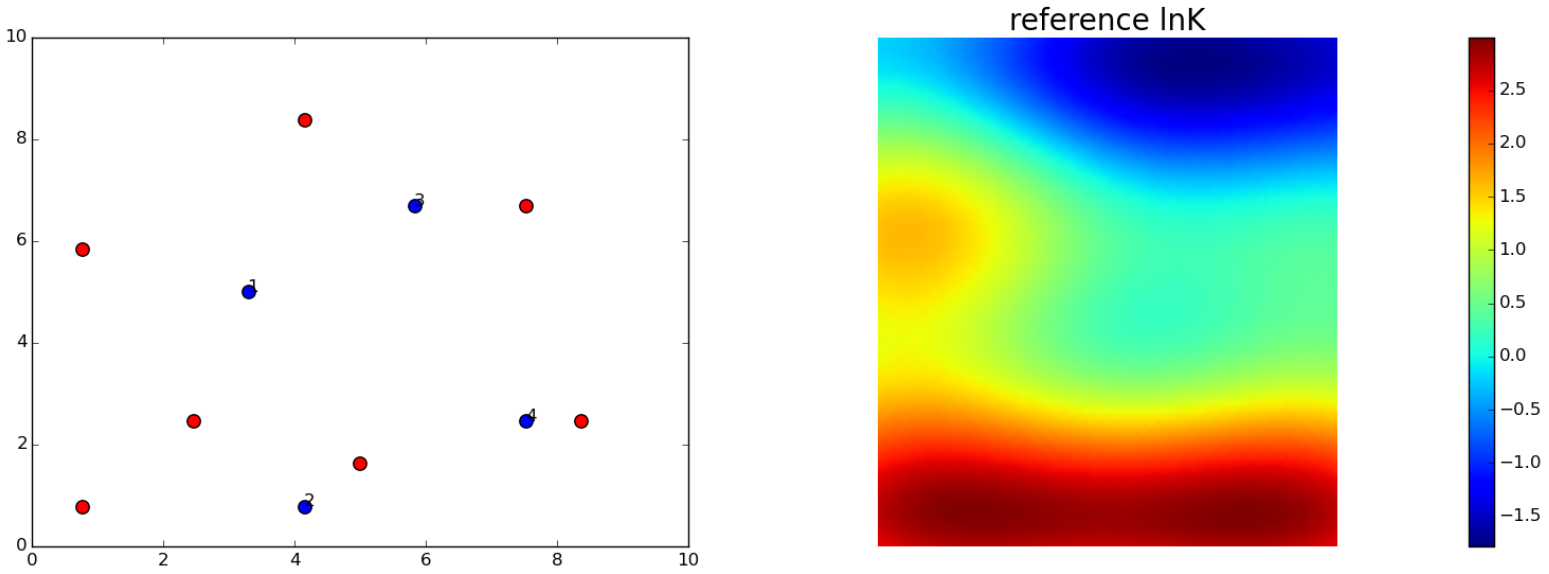

Figure : The domain and "true" lnK

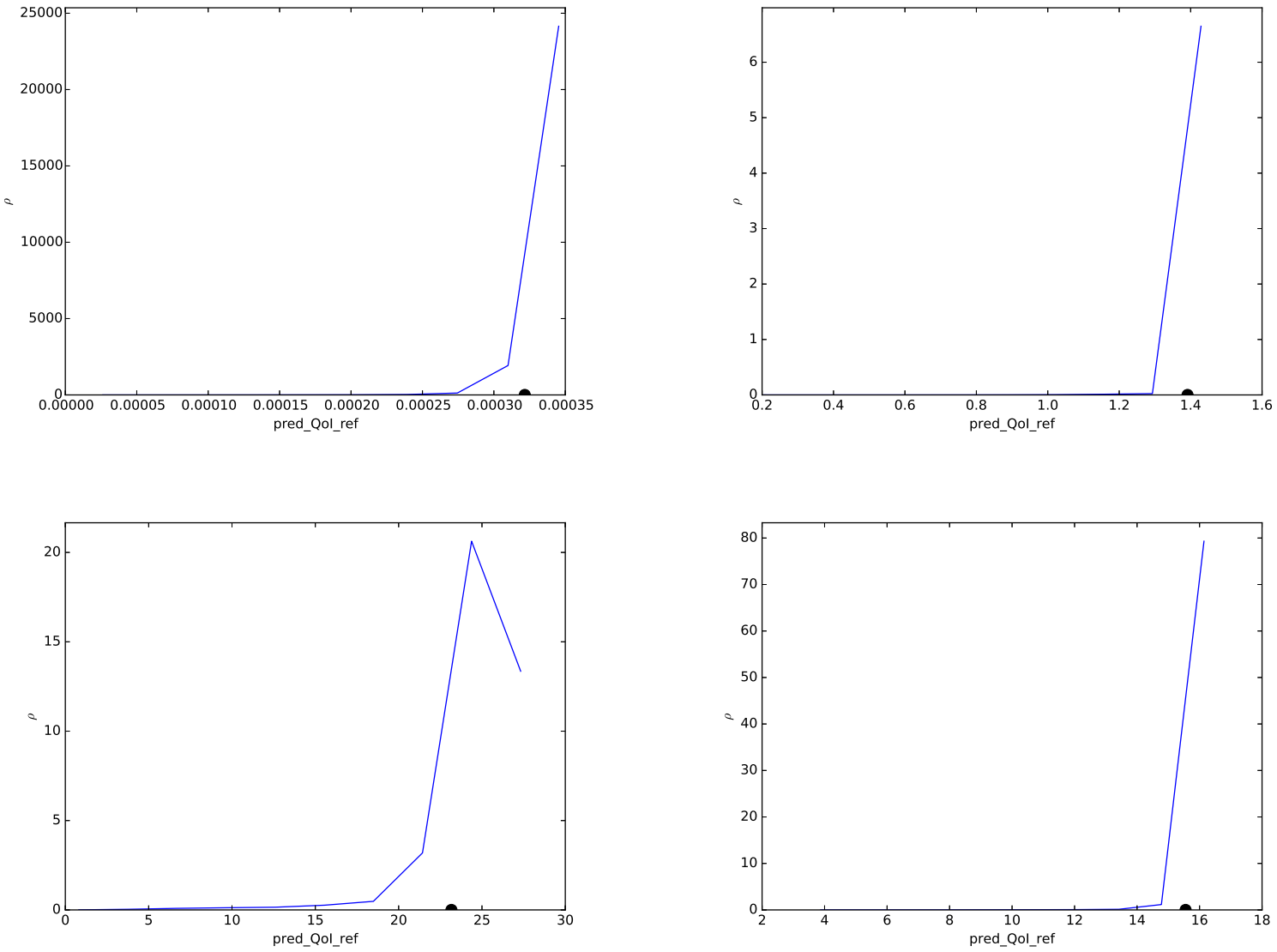

Figure : 1D pdf of predicted hydraulic heads at blue dots

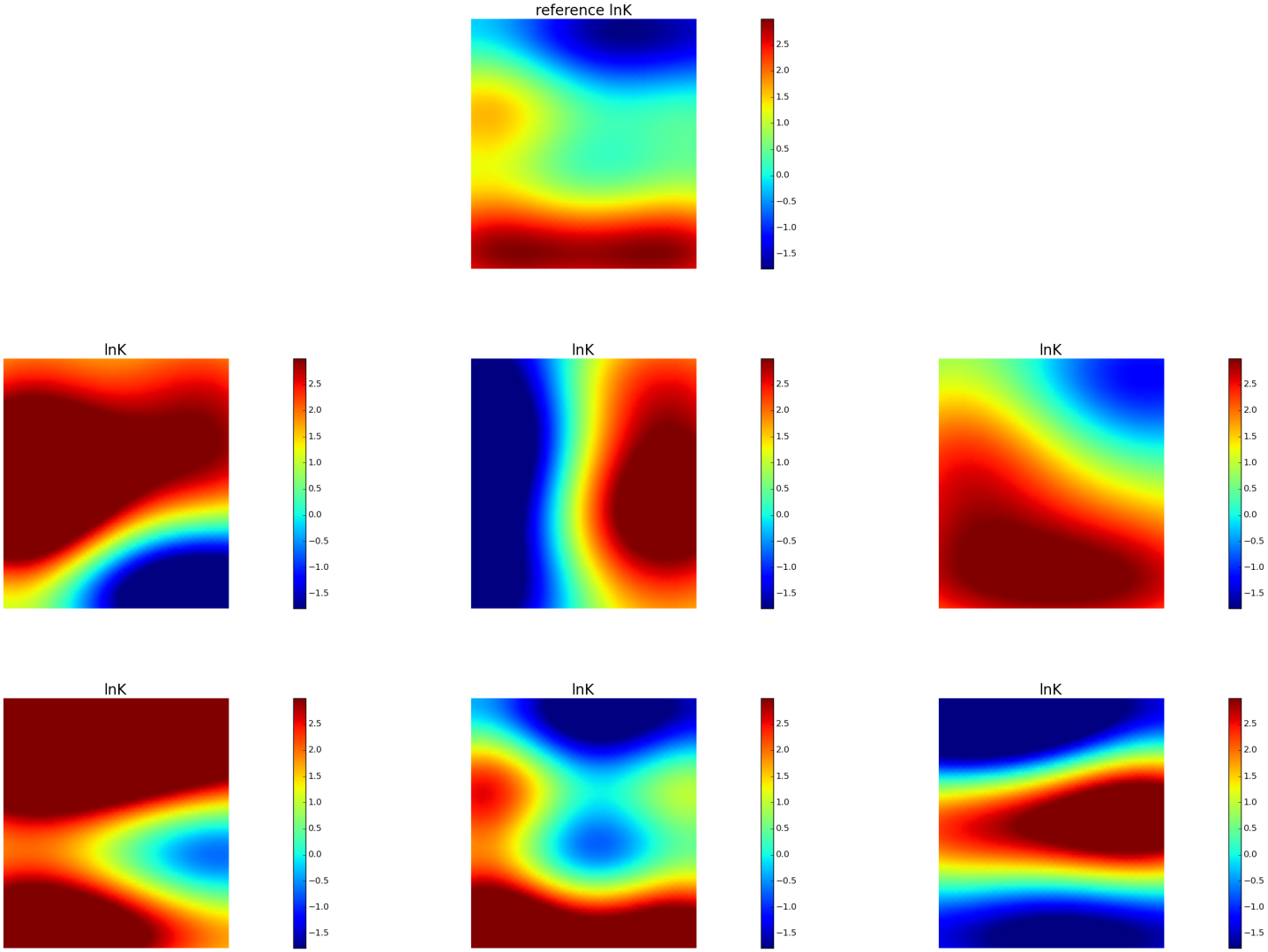

Figure : Log hydraulic conductivity fields generated using samples with the highest probability densities

References

- Ghanem, Roger G., and Pol D. Spanos. Stochastic finite elements: a spectral approach. Courier Corporation, 2003.
- Breidt, J., T. Butler, and D. Estep. "A measure-theoretic computational method for inverse sensitivity problems I: Method and analysis." SIAM journal on numerical analysis 49.5 (2011): 1836-1859.
- Butler, T., D. Estep, and J. Sandelin. "A computational measure theoretic approach to inverse sensitivity problems II: a posteriori error analysis." SIAM journal on numerical analysis 50.1 (2012): 22-45.
- Butler, T., et al. "A measure-theoretic computational method for inverse sensitivity problems III: Multiple quantities of interest." SIAM/ASA Journal on Uncertainty Quantification 2.1 (2014): 174-202.
- Butler, Troy, et al. "Solving stochastic inverse problems using sigma-algebras on contour maps." arXiv preprint arXiv:1407.3851 (2014).
- Zhang, Dongxiao, and Zhiming Lu. "An efficient, high-order perturbation approach for flow in random porous media via KarhunenLoeve and polynomial expansions." Journal of Computational Physics 194.2 (2004): 773-794.

Thank You